Electrolux PROFESSIONAL

High Productivity Cooking Smart Electric Boiling Pan 50lt, 600mm tilting height, with feet

ITEM #

MODEL #

NAME #

SIS #

AIA #

232300 (SM6B50F) Smart 50 l, with feet including lid, automatic water filling and level control. H=600

Short Form Specification

Item No.

AISI 304 stainless steel construction; deep drawn pan with rounded edges manufactured from AISI 316 stainless steel. Pan can be tilted beyond 90° to completely empty the food. Motorised tilting with tilting axis located at the front of the pan to keep the pouring lip high and allow tall vessels to be filled. Food is uniformly heated via the base and the side walls of the pan by an indirect heating system using integrally generated saturated steam at a temperature of 120°C in a jacket with an automatic deaeration system. Safety valve avoids overpressure of the steam in the jacket. Safety thermostat protects against low water level. Max pressure at 1,5 bar. Programmable water filling system. High thermal input and fast heat up. Heavy duty balanced stainless steel lid, easy to remove and turn to facilitate cleaning. The insulation allows a lower temperature on the outer panels. The foamed thermal insulation guarantees a cool upper edge of the cooking vessel surface. IPX5 water protection. For freestanding installation one left column is necessary for each unit. 600mm tilting height.
Including automatic water filling and level control.
Equipped with feet for better hygiene, flexibility and versatility.

APPROVAL:

Main Features

- 600 mm tilting height minimum.
- Equipped with feet for better hygiene, flexibility and versatility.
- Automatic water filling makes possible to preset the desired quantity of water.
- Food is uniformly heated through the base and side walls of the pan by an indirect heating system which uses integrally generated saturated steam at a temperature of 120°C in a jacket with an automatic deaeration system.
- Fast working thanks to the high efficient heating technology and well insulation that keeps the heat inside the well.
- Electronic control with possibility to store up to 50 programs, large display for easy use and a complete control over the following functions: start, cooking time, temperature and water filling.
- Curved pan base guarantees that the appliance ia also suitable to prepare small quantities of food.
- Constructed to meet the highest hygiene standards.
- Compliant to CE requirements for safety.
- Safe thanks to the higher water protection IPX5 and the lower temperature outside the panels.
- Isolated upper well rim avoids risk of harm for the user.
- High thermal input and fast heat up.
- Level control: maximizes heating elements lifetime, avoids jacket water manual filling.
- Safety thermostat protects against low water level.
- Safety valve avoids overpressure of the steam in the jacket.
- OPTIONS (to be ordered with the machine and must be installed in the factory):
  -Spray gun - integrated spray unit

Construction

- Ergonomic and user friendly thanks to the high tilting position and the pouring lip design which allow to easily fill containers.
- Heavy duty, balanced stainless steel lid with sliding plastic cover to insert ingredients. Easy to remove and turn to facilitate cleaning.
- Tilting axis located at the front and upper position of the pan to keep the pouring path short when filling different types of vessels.
- Vessel can be tilted beyond 90° to completely empty the food.
- Motorised tilting.
- Max pressure 1,5 bar.
- AISI 304 stainless steel construction with AISI 316 stainless steel deep drawn pan with rounded edges.

Sustainability

- High-quality thermal insulation of the pan saves energy and keeps operating ambient temperature low.

Optional Accessories

• Strainer 50lt	PNC 928024	❑
• Short brush for connection to boiling pan spray unit	PNC 928082	❑
• Long brush for connection to boiling pan spray unit	PNC 928083	❑
• Left column for 600mm tilting height models for frame with feet	PNC 928169	❑
• Frame with feet for 50l SMART boiling pan, models with feet only	PNC 928178	❑
• Fixing kit for installation on slope or slippery floors for models with feet only	PNC 928186	❑

The company reserves the right to make modifications to the products without prior notice. All information correct at time of printing.

High Productivity Cooking Smart Electric Boiling Pan 50lt, 600mm tilting height, with feet

Front

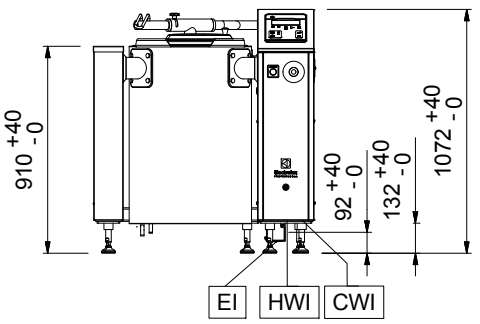

Side

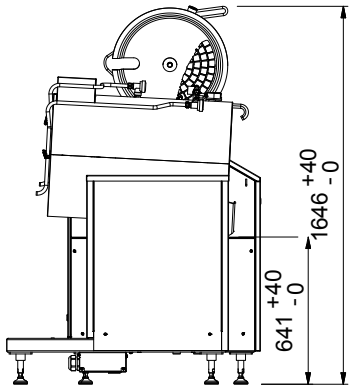

CWI1 = Cold Water inlet 1 (cleaning)
EI = Electrical inlet (power)
HWI = Hot water inlet

Top

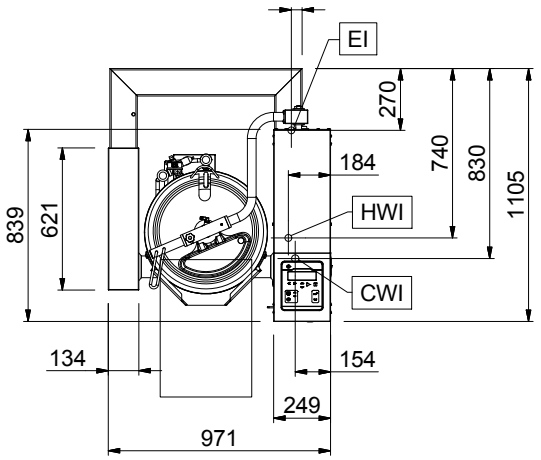

Electric

Supply voltage:	
232300 (SM6B50F)	400 V/3N ph/50 Hz
Electrical power max.:	15 kW

Installation:

Distance back floor tilted:	638 mm

Key Information:

Working Temperature MIN:	30 °C
Working Temperature MAX:	121 °C
Vessel (round) diameter:	425 mm
Vessel (round) depth:	425 mm
External dimensions, Width:	970 mm
External dimensions, Depth:	915 mm
External dimensions, Height:	1050 mm
Net vessel useful capacity:	50 lt
Tilting mechanism:	;Automatic
Bearing:	;Front

The company reserves the right to make modifications to the products without prior notice. All information correct at time of printing.

2024.10.07